AFC INDUSTRIES, INC.
13-16 133RD PLACE
COLLEGE POINT, NY 11356
TEL: 718-747-0237
FAX: 718-747-0726

THE PLANS AND DRAWINGS CONTAINED HEREIN ARE PROPRIETARY AND MAY NOT BE COPIED OR REPRODUCED MECHANICALLY, ELECTRONICALLY OR BY ANY MEANS WITHOUT WRITTEN PERMISSION FROM AFC INDUSTRIES, INC.

SO#:
QTY:

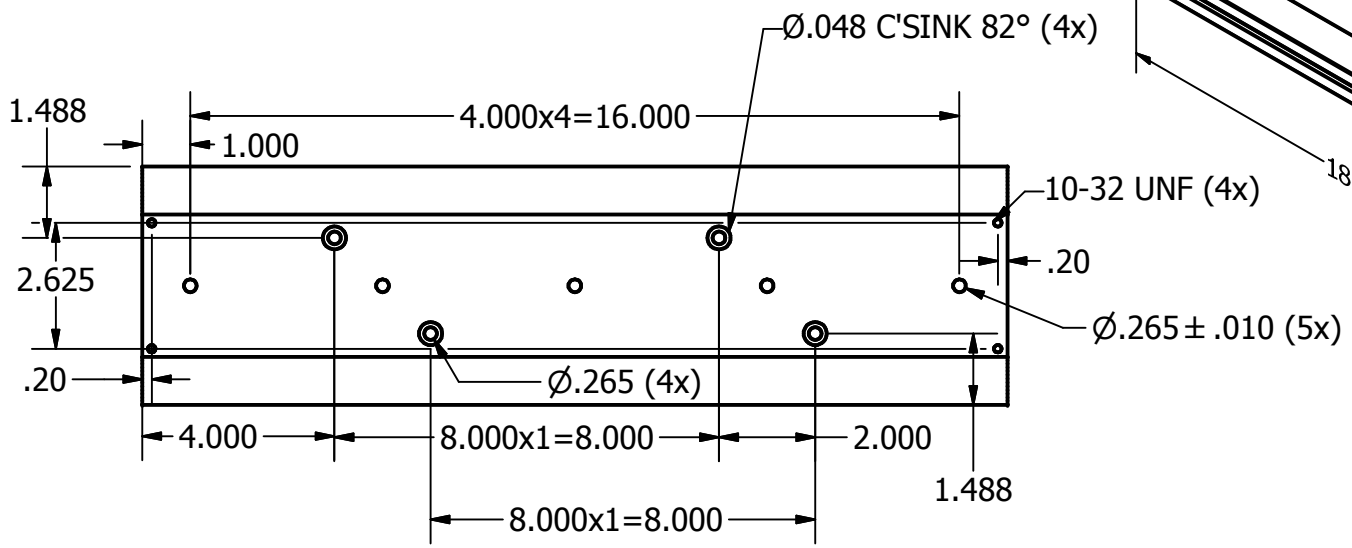

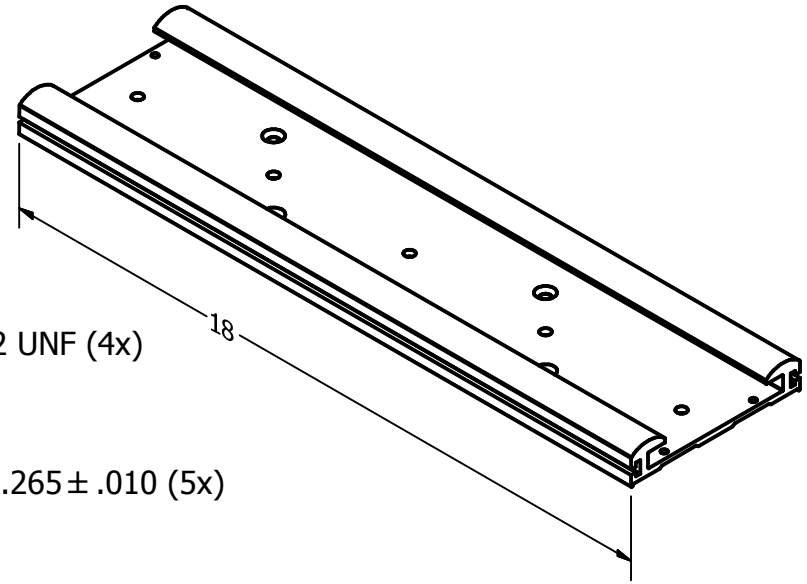

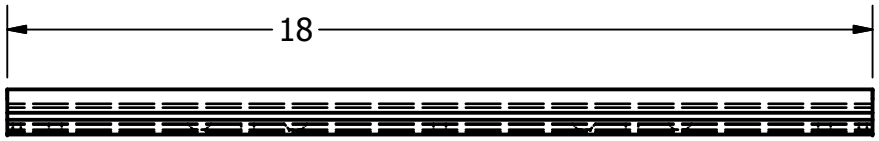

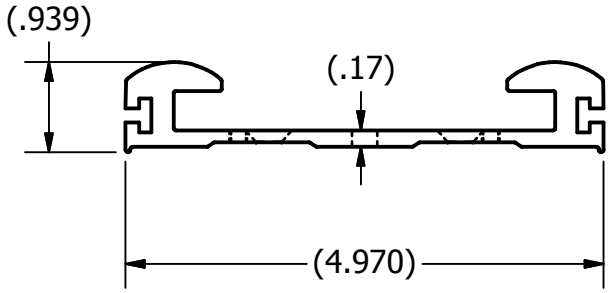

All Holes to be punched unless specified otherwise

All Slots to be punched unless specified otherwise

L/B/W/P

MS1249
WM-TRK-18-SS

NOTES: QTY=1/unit WM-TRK-18-SS	MATERIAL: Aluminium Al-6061 AFC WM Track Stock SHEET 1 OF 1 SCALE: N.T.S.	DRAWN BY: SV APPROVED:	DATE: 6/5/2015	DESCRIPTION: Wall Mount Track for Set Screws PART: WM-TRK-18-SS
		PATH: L:\PP&T-DWG\1 INVENTOR CONTENT CENTER\Library\Machined\WM Track\WM-TRK-18-SS\WM-TRK-18-SS.idw		